# UART WiFi Module

**wifi module HLK-RM04 With 32m ram 8M flash**

## DETAILS

HLK-RM04 is a new low-cost embedded UART-ETH-WIFI module (serial port - Ethernet - Wireless network) developed by Shenzhen Hi-Link Electronic co., Ltd.This product is an embedded module based on the universal serial interface network standard, built-in TCP / IP protocol stack, enabling the user serial port, Ethernet, wireless network (wifi) interface between the conversions.Through the HLK-RM04 module, the traditional serial devices do not need to change any configuration; data can be transmitted through the Internet network. Provide a quick solution for the user's serial devices to transfer data via Ethernet.

**Down Datasheet here**

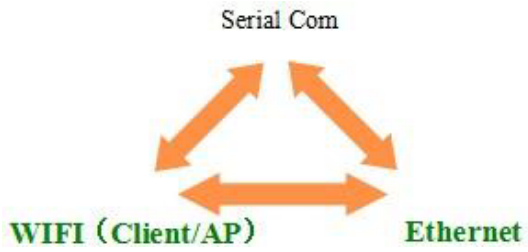


Picture1.F-structure

# 1.Summarize

## Technical Specifications

| | |
|---|---|
| Network standard | wireless：IEEE 802.11n、IEEE 802.11g、IEEE 802.11b |
| | wired：IEEE 802.3、IEEE 802.3u |
| Wireless transmission rate | 11n: maximum up to 150Mbps<br>11g: maximum up to 54Mbps<br>11b: maximum up to 11Mbps |
| Tracks number | 1-14 |
| Frequency range | 2.4-2.4835G |
| Emission power | 12-15DBM |
| Interface | 1个10/100Mbps LAN/WAN multiplex interface、interface |
| **Antenna** | |
| Antenna type | Onboard antenna / External Antenna |
| **Functional Parameters** | |
| WIFI work mode | Client/AP/Router |
| WDS Function | Support WDS wireless bridge connection |
| Wireless security | Wireless MAC address filtering |
| | Wireless security function switch |
| | 64/128/152 bit WEP encryption |
| | WPA-PSK/WPA2-PSK、WPA/WPA2 security mechanism |
| Network management | Remote Web management |
| | Configuration file import and export |
| | WEB software upgrade |
| **Serial to Network** | |
| Maximum transmission rate | 230400bps |
| TCP connection | Max connection number>20 |
| UDP connection | Max connection number>20 |

| | |
|---|---|
| Serial baud rate | 50~230400bps |
| **Other Parameters** | |
| Status indicator | Status indicator |
| Environmental standard | Operating temperature：-20-70℃ |
| | Operating humidity：10%-90%RH |
| | Storage temperature：-40-80℃ |
| | Storage humidity：5%-90%RH |
| Additional properties | Frequency bandwidth optional：20MHz、40MHz ,Auto |

# 2.Hardware Explanation

## Mechanical Dimensions

HLK-RM04 Mechanical Dimensions is shown in the following picture：

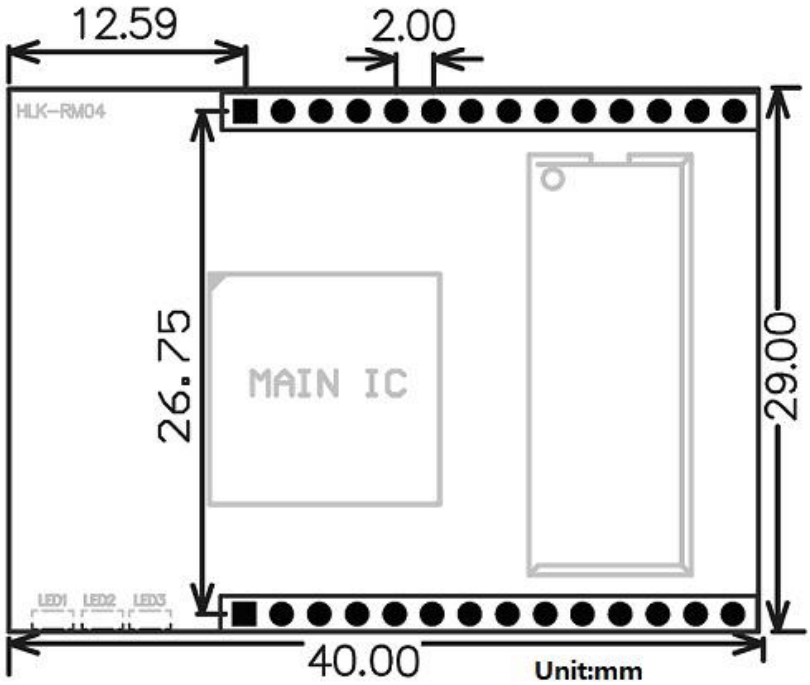


**3.Pin Interface**

The Pin of this product as shown above is defined as follows

Table2-2 module pin interface

| No | Fuction | Direction | Explaination |
|---|---|---|---|
| 1 | VCC | Power In | 5V power supply input |
| 2 | GND | GND | Power Ground |
| 3 | WLAN_LED | O | WIFI start-up indicate (valid on High level) |
| 4 | VDD | Power Out | 3.3V power output |
| 5 | LINK2 | O | Net port 2 connection indicate (Valid on lower level) |
| 6 | USB_P | I/O | USB signal+ |
| 7 | USB_M | I/O | USB signal- |
| 8 | STA/GPIO_0 | I/O | Status indication/GPIO_0 (valid on low level) |
| 9 | GPIO_1 | I/O | GPIO_1 |
| 10 | ES/RST | I | Exit transparent transmission mode/restore factory value |
| 11 | TXOP2 | A | Net port 2 TX-P |
| 12 | TXON2 | A | Net port 2 TX-N |
| 13 | RXIP1 | A | Net port 1 RX-P |
| 14 | RXIN1 | A | Net port 1 RX-N |
| 15 | RXIN2 | A | Net port 2 RX-P |
| 16 | RXIP2 | A | Net port 2 RX-P |
| 17 | TXON1 | A | Net port 1 TX-N |
| 18 | TXOP1 | A | Net port 1 TX-P |
| 19 | RTS_N/GPIO_2 | I/O | Uart 2 RTS |
| 20 | UART_RX | I | Uart 1 RX |
| 21 | UART_TX | O | Uart 1 TX |
| 22 | RXD/GPIO_3 | I/O | Uart 2 RX |
| 23 | LINK1 | I/O | Net port 1 connection indication (valid on low level) |
| 24 | CTS_N/GPIO_4 | O | Uart 2 CTS |
| 25 | WPS/RST | I | WPS button/restore factory value |
| 26 | TXD/GPIO_5 | O | Uart 2 TX |
| 27 | VDD_1_8 | Power Out | Net port 1.8V output |
| 28 | VCC | Power In | 5V input |

## 4.Electrical Characteristics

Exceeding these conditions will result in damage to the device

| Parameter | Min | Max |
|---|---|---|
| Module supply voltage VCC | 3.9V | 5.5V |
| Module Voltage Output VO3.3 | 3.1V | 3.5 |
| Module Voltage Output VO1.8 | 1.65V | 1.9 |
| GPIO Voltage | 3.1V | 3.5V |
| Storage temperature | -40℃ | 95℃ |

## 5.Typical Application Circuit

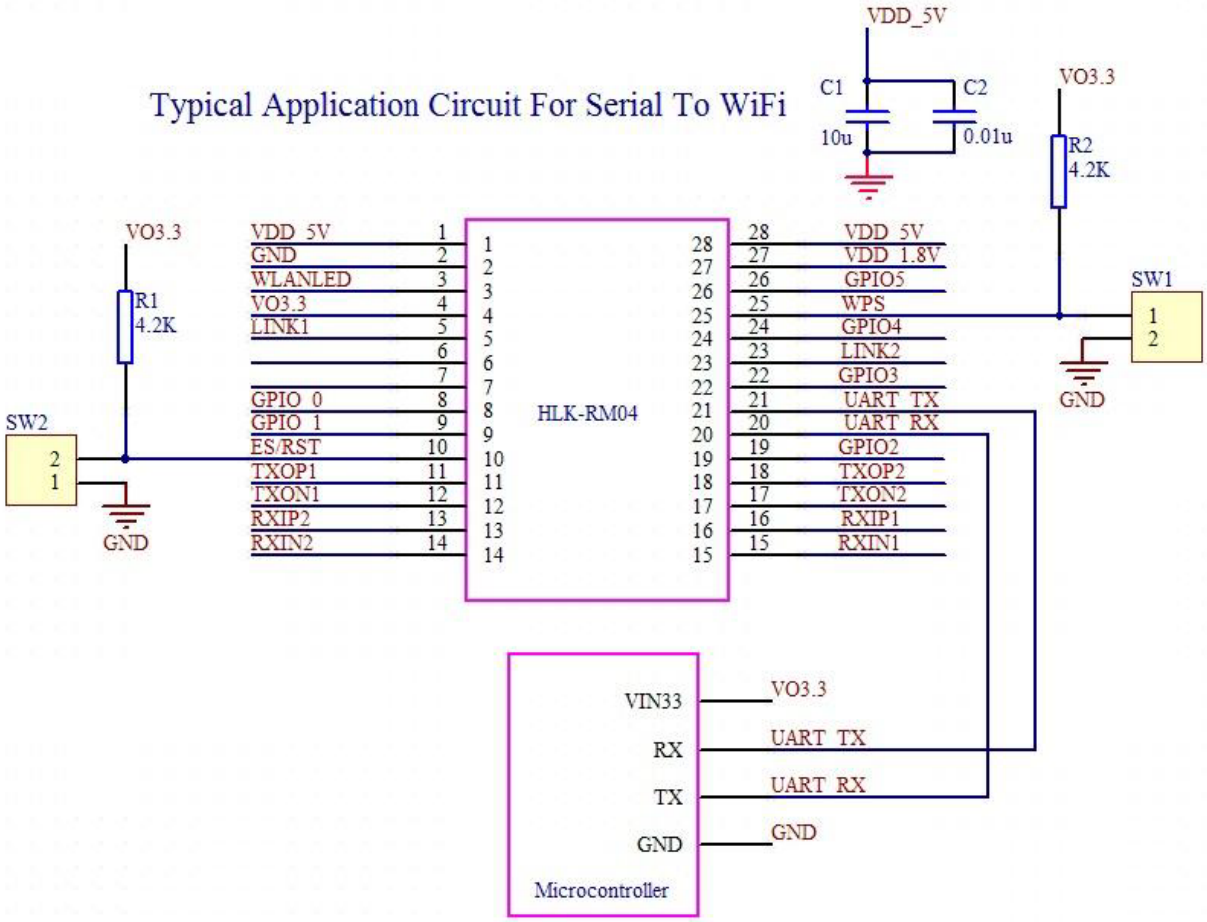

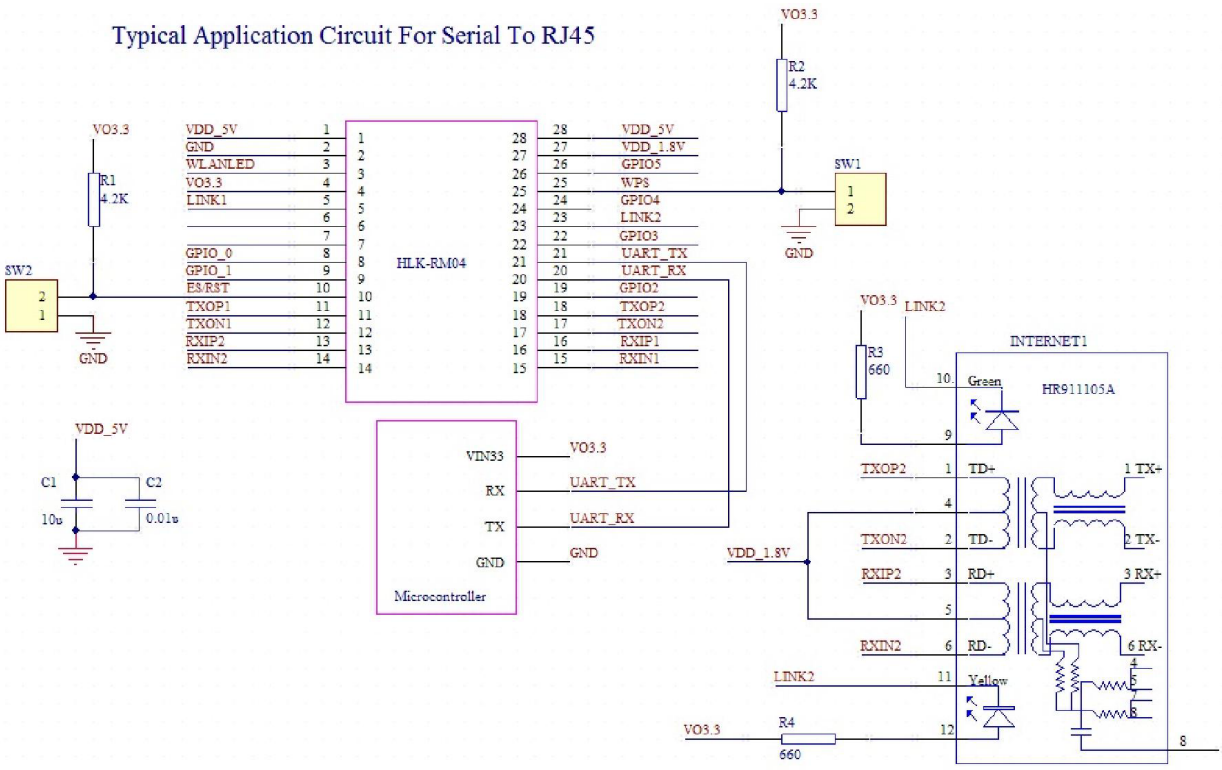
Typical Application Circuit For Serial To RJ45
VO3.3
R2
4.2K
SW1
GND
VO3.3
R1
4.2K
SW2
GND
VDD_5V
GND
WLANLED
VO3.3
LINK1
GPIO_0
GPIO_1
FS/RST
TXOP1
TXON1
RXIP2
RXIN2
HLK-RM04
VDD_5V
VDD_1.8V
GPIO5
WPS
GPIO4
LINK2
GPIO3
UART_TX
UART_RX
GPIO2
TXOP2
TXON2
RXIP1
RXIN1
VDD_5V
C1
10u
C2
0.01u
VIN33
RX
TX
GND
Microcontroller
VO3.3
UART_TX
UART_RX
GND
VO3.3
LINK2
R3
660
INTERNET1
HR911105A
Green
TXOP2
TXON2
RXIP2
RXIN2
TD+
TD-
RD+
RD-
1 TX+
2 TX-
3 RX+
6 RX-
VDD_1.8V
LINK2
Yellow
VO3.3
R4
660

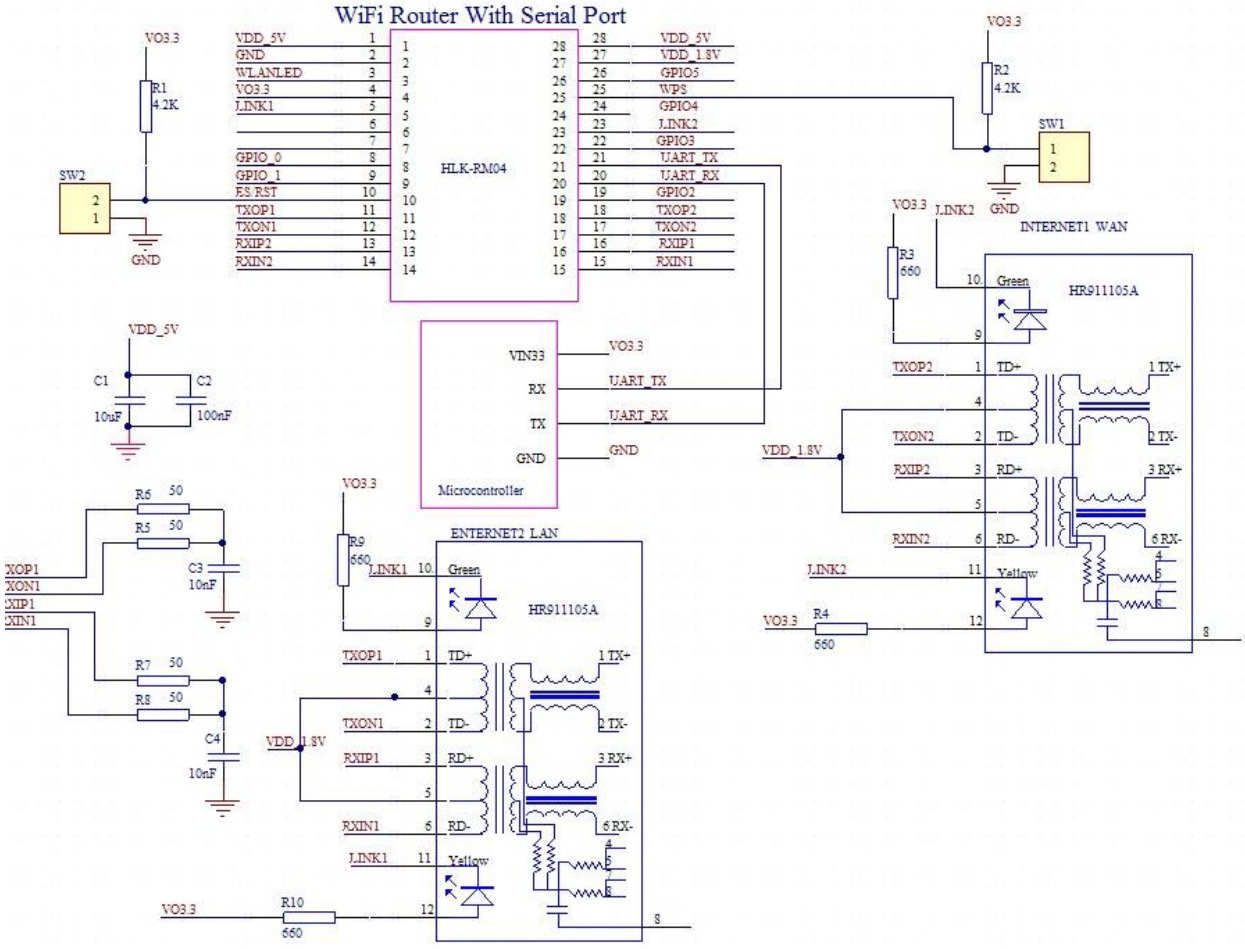
WiFi Router With Serial Port
HLK-RM04
VDD_5V
GND
WLANLED
VO3.3
LINK1
GPIO_0
GPIO_1
ES/RST
TXOP1
TXON1
RXIP2
RXIN2
VDD_1.8V
GPIO5
WPS
GPIO4
LINK2
GPIO3
UART_TX
UART_RX
GPIO2
TXOP2
TXON2
RXIP1
RXIN1
R1
4.2K
R2
4.2K
SW1
SW2
GND
VIN33
RX
TX
Microcontroller
C1
10uF
C2
100nF
R3
660
R4
660
R5
50
R6
50
R7
50
R8
50
C3
10nF
C4
10nF
R9
660
R10
660
INTERNET1 WAN
HR911105A
ENTERNET2 LAN
Green
Yellow
TD+
TD-
RD+
RD-
1 TX+
2 TX-
3 RX+
6 RX-